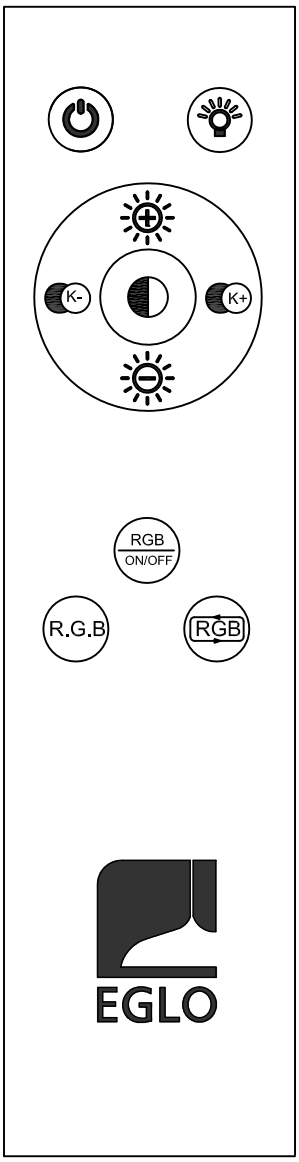
K-
K+
RGB
ON/OFF
R.G.B
RGB
EGLO

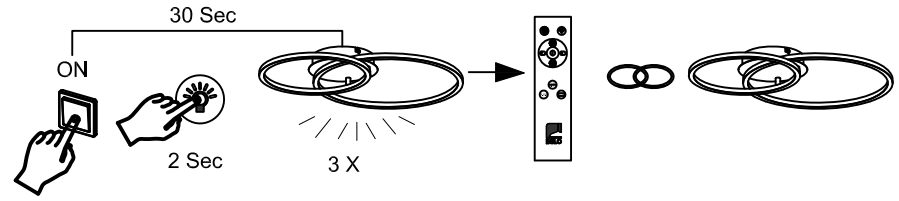
30 Sec
ON
2 Sec
3 X

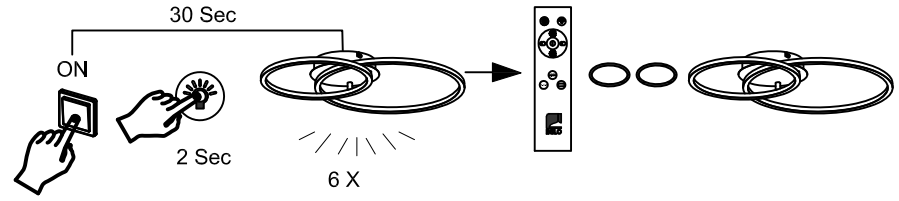
30 Sec
ON
2 Sec
6 X

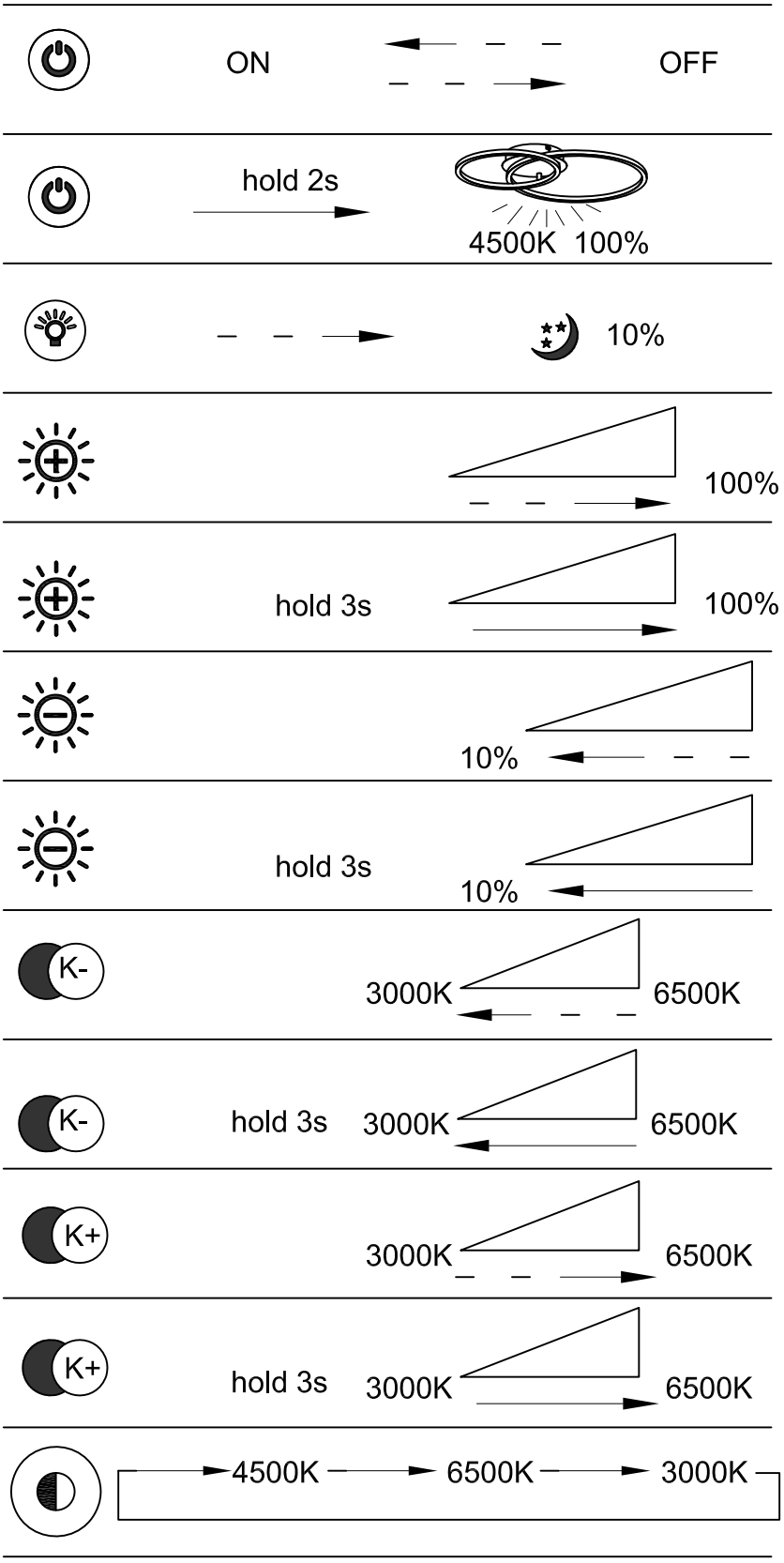
ON
OFF
hold 2s
4500K 100%
10%
100%
hold 3s
100%
10%
hold 3s
10%
K-
3000K
6500K
K-
hold 3s
3000K
6500K
K+
3000K
6500K
K+
hold 3s
3000K
6500K
4500K
6500K
3000K

www.eglo.com

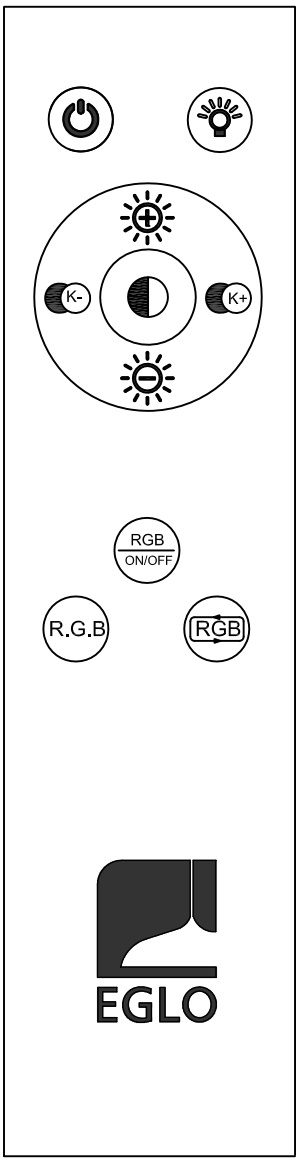

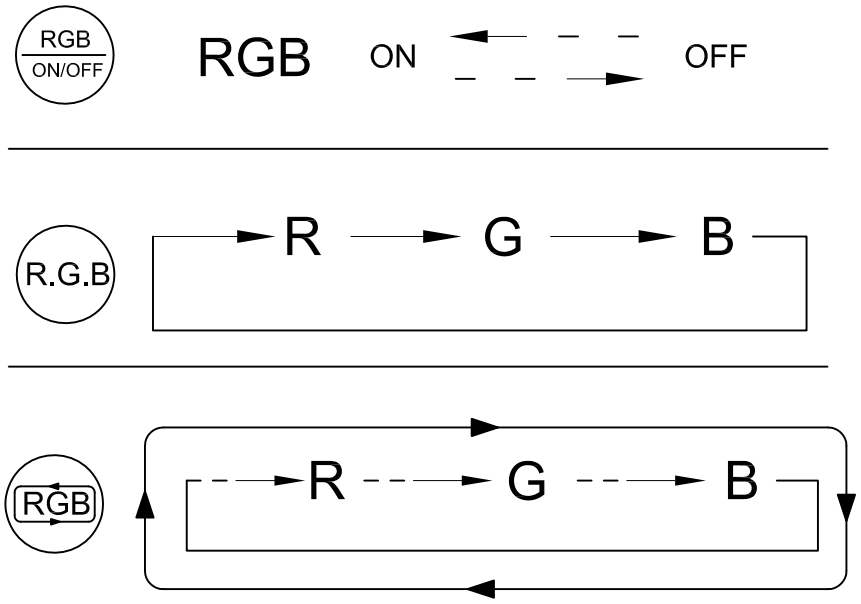

www.eglo.com